ENGINE, COILS & SPARK PLUGS - Z26S4D92AN/AH/BN/BH (C750271)

RZR - RZR PRO S4 ULTIMATE (R01) - Z26S4D92AN/AH/BN/BH

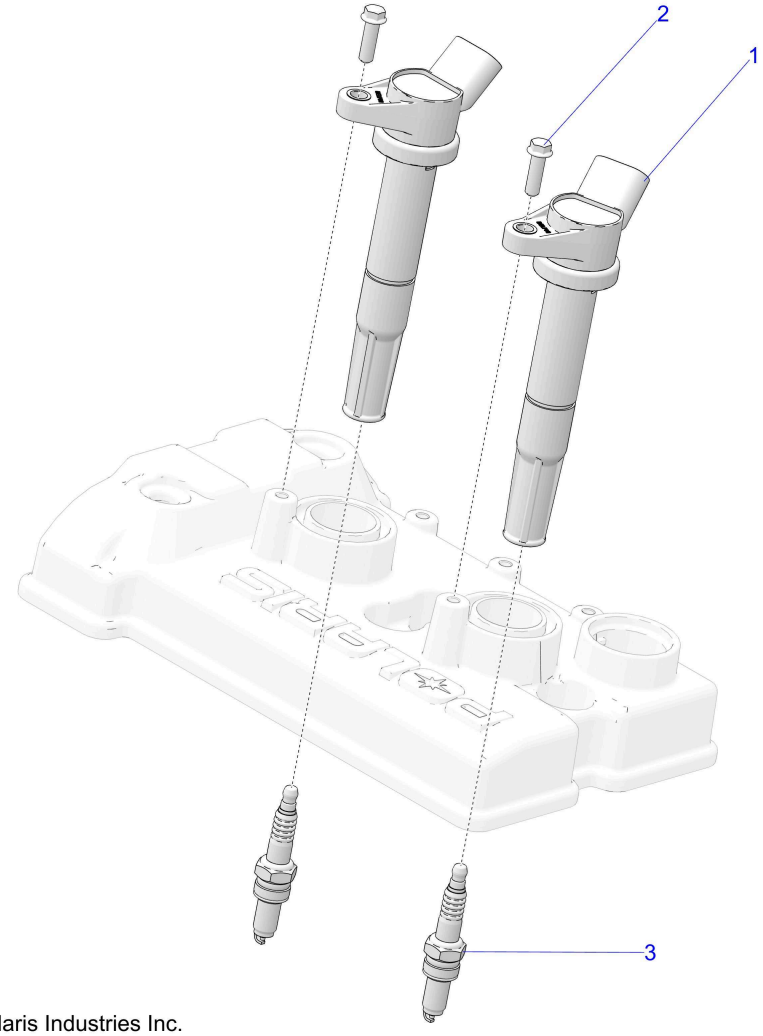

© 2023 Polaris Industries Inc.

C750271

Reference #	*Part#*	*Description*	*Quantity*
1	4015017	COIL-IGNITION W/SUPPRESSOR	2
2	7518576	SCREW-HXFL-M6X1.0X20 8.8 ZY3	2
3	3023173	PLUG, SPARK	2

Copyright 1996-2026 Polaris Industries U.S.A All rights reserved.